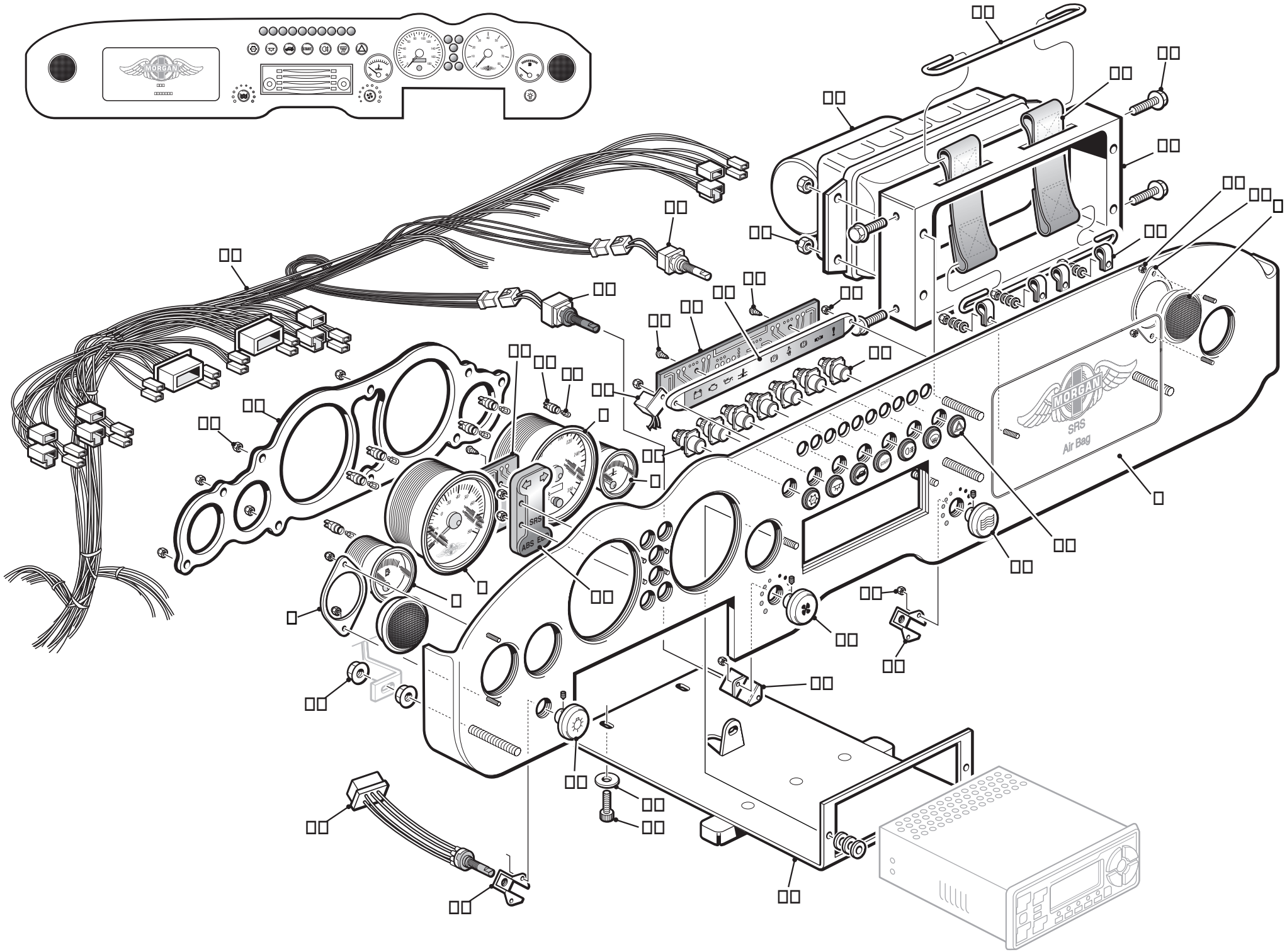
MORGAN
SRS
Air Bag
SRS
ABS